AJBOX EDUCATIONAL KITS

Teachers Project Guide

EDUCATIONAL SPINNING TOP

SUMMARY:

‘Educational Spinning Top Kit’ by AJBOX is an educational STEM focused mechanical kit which is supplied as a set of 12 kits, pre-cut out of plywood, along with a 12 sets of the joining pieces. The individual kits can easily be snapped out and each one is intended to be built by students individually or in pairs.

Each spinning top kit comes with 2 bolts, 2 ‘wing’ nuts and suitable string. You will need to cut the supplied string into 12 equal lengths. An extra set of nuts and bolts are provided per pack of 12 spinning top kits, as spares.

HOW TO USE THE KITS:

You can use them in a variety of educational approaches, or as a standalone STEM activity. Two suggested lesson ideas are.

1. Tutankhamen’s top. Spinning tops throughout 6000 years of recorded history, Childhood Toys

2. STEM - Why tops stay upright. Toys which use gyroscopic action. Effects of air resistance and ground friction on spinning tops

HEALTH AND SAFETY:

The laser cutting process produces a small amount of fine dust which is the smoke produced by the laser burning out the shapes in the kit. Like any fine dust, rarely somebody may be sensitive to it. It is not recommended to wash the kits because the wood will swell and distort, but you can use any brand of spray furniture wax to seal the dust in if you believe it may be a problem.

Some students find the unique burnt plywood smell attractive and you may need to discourage them from sniffing the pieces.

The plywood is made from thin layers of wood glued together and there is a small chance of splinters. The glue used in the plywood is PVA based and the birch wood plywood is non toxic.

BEFORE YOU START:

I urge you to build a spinning top kit yourself and practice with it before you work with a class so you are familiar with the pieces, the order in which they are assembled and how to spin it effectively The assembly video is a good place to start as it shows how to assemble and spin it. It is good practice to buy have other spinning tops for students to see, try an compare with such as the widely available plastic and wooden ones versions.

AJBOX EDUCATIONAL KITS
EDUCATIONAL SPINNING TOP

HOW THE TOP WORKS:

The top is made up of three pieces when assembled.

The Spinning **TOP** itself is a stack of differently shaped pieces threaded onto a long metal bolt, and held in place by a wing nut, which is a type of mechanical fixing, which can be tightened by hand.

The **LAUNCHER** is 4 pieces held together with a bolt and wing nut. It is used to hold the top, and launch it, making it easy to get long spin times.

The **STRING** is a piece of string tied to its small handle to make it easier to use.

TO USE:

1. Wrap the string around the middle of the top

2. Put the top with the string wound round it in the holder, gripping the launcher in one hand and the string in the other

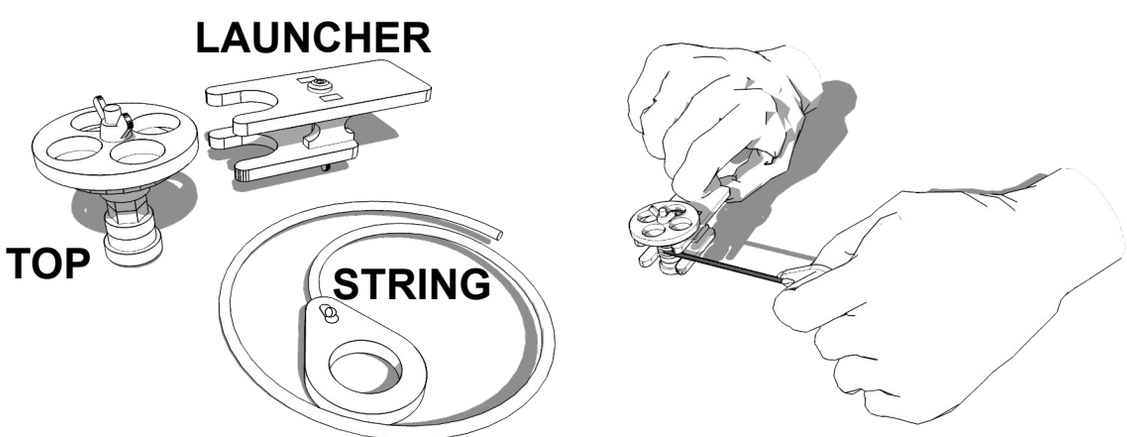

3. Hold the **LAUNCHER** still and sharply pull the **STRING** back towards you so it spins in the **LAUNCHER,** when the string runs out, the top will drop and continue to spin. How long it spins will depend on how fast it leaves the launcher, how level the top is when spinning, and the type of surface it spins on.

PROBLEMS:

The plywood kits are robust but occasionally a hidden fault within the plywood, which is not visible on the surface, can cause a piece to break in use. This is rare but if you have this problem, just contact me with a photo of the broken piece and I will send you out a free replacement piece.

COLOURING AND DECORATING:

The surface of the plywood takes pen and pencil well but it is recommended that any wet process such as large glued on pictures or paint is applied after the top is assembled so that pieces do not swell and become difficult to assemble later. Varnishing is best done after assembly as it makes pieces thicker.

ASSEMBLY TIPS:

- Use the ‘Assembly’ worksheet which is an A3 ‘shadow board’ that students place the pieces onto, to ensure they haven't thrown anything away by accident. This can be folded up to make a pouch for storage between lessons.
- Encourage students to discard the ‘sprue’ (Unwanted bits) as these can have pointy edges. These can be composted or burnt like other wood materials.
- Use a tiny dab of PVA on the end of the string to stop it fraying.
- Keep the string length less than 30cm for safety, and to make sure there is not too much string bulking up the top, preventing it from spinning in its holder. A single long length of string is supplied with each set of 12 kits, cut to size for the students.
- A shallow metal mixing bowl makes a great battling arena with tops trying to be the last one standing.
- Assemble by followng the diagrams closely. There is a diagram of what order to assemble the pieces for the top and the handle on the ‘Shadow’ worksheet, and the presentation and video follow the same stages.
- For a longer spinning top, try inserting a ‘penny’ steel washer between the two largest discs of the top. This will increase the tops mass/weight but it is vital to ‘centre’ it or the top will wobble instead. Penny washers (named after the old fashioned pre-decimal big penny coins) are available from Wilko’s and B&Q and are usually a couple of pence each in bulk.
- The top spins on the head of the long steel bolt, make sure children do not spin the top on something that scratches easily.
- Rubbing an unlit candle on the curved bits of the holder, where the top rubs against it, can make for faster spins as it lubricates the moving parts. This is a standard technique in STEM to reduce friction between moving pieces.
- Students sometimes assemble the pieces in the wrong order in which case it ‘works’ as a top, but not well, and may not fit into the holder properly.
-

AJBOX EDUCATIONAL KITS
EDUCATIONAL SPINNING TOP

SPINNING TOPS IN HISTORY:

The earliest recorded spinning top is a clay top found in Iraq, from the 35th century BC, which makes it almost 6000 years old as a toy. There was a top in the tomb of Tutankhamen and they have been popular childhood toys for a long time. Nowadays they tend to be made out of moulded plastic but you can still buy wooden ones as well as extremely accurate (expensive) and long spinning metal versions.

Many toys have been based on spinning tops such as the 'Beyblade' series of toys, and there have been other 'battling tops' toys in the past from major toy manufacturers. Many toy cars are propelled using a similar system.

Competitions to have the longest spinning top are popular and specialised high tech metal and ceramic tops can spin for a long time, but at present, a wooden top holds the Guinness book of records with 7 hr 1 min 14 sec.

The AJBOX spinning top, if well built, can spin for over 30 seconds but is limited by the roughness of the bolt head it spins on, and its relatively low weight (Mass).

HOW TO MAKE THE AJBOX TOP SPIN LONGER:

A good way to make the top spin longer if to fill the head of the bolt with epoxy resin, then when it dries, fix it in an electric drill and use a very fine piece of sandpaper or a nail file pushed against it to gently point, smooth and round the bolt head. Performing spins on a really hard smooth surface, such as a marble wall tile (£2 as a sample from most DIY stores) will also help get long spin times of over 60 seconds. Fitting longer string will not necessarily give you longer run times, as it is the spinning speed of the top when the string runs out, its energy stored, the friction of the surface it spins upon and how smoothly you can 'launch' the top so it settles into a stable spin that all affects the timing.

Add 'Mass' to the top by inserting a thick heavy steel washer, known as 'Penny Washers' between the top two layers before tightening the wingnut. Make sure this is centred otherwise the top will wobble and not spin for longer. This added mass means the top can store more energy, which it needs to lose to stop spinning..

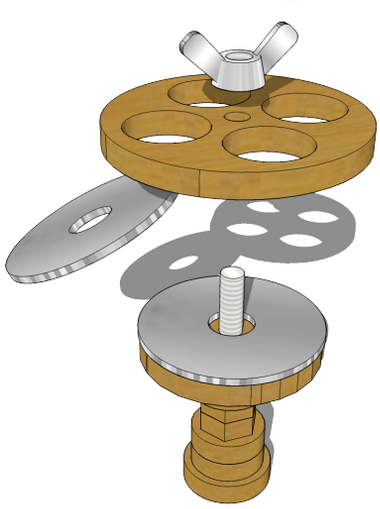

ADDING MASS TO INCREASE SPIN TIME USING METAL WASHERS

AJBOX EDUCATIONAL KITS

EDUCATIONAL SPINNING TOP

AJ Booker selling at the National UK Maker Faire in 2018

A variety of cam kits Coffee, Blank, Shark, Dog/Cat

A7 bicycle kit with lock and stand

Flexible Catapult kit that fires pennies

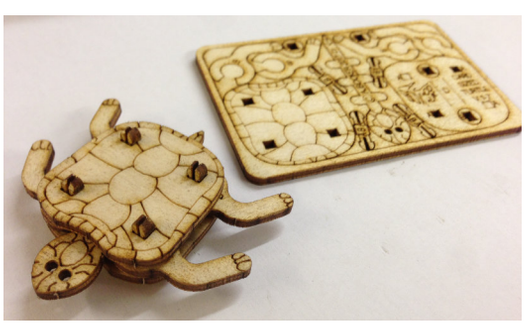

Mechanical moving turtle kit

As well as a range of educationally focused kits with free resources, I also sell a wide range of kits that cover many STEM areas. These are inexpensive, fun to assemble and will inspire people.

I am available for staff training days, as a key speaker at your events and as an Educational Consultant to help you develop your STEM offering.