AJBOX EDUCATIONAL KITS - RUBBER BAND CATAPULT SHADOW SHEET

'AJBOX RUBBER BAND CATAPULT' IS A LOW COST EDUCATIONAL STEM KIT WHICH COMES WITH EXTENSIVE FREE EDUCATIONAL RESOURCES. AVAILABLE FROM WWW.AJBOX.CO.UK - WORLDWIDE SHIPPING - SUITABLE FOR AGES 6 AND OVER

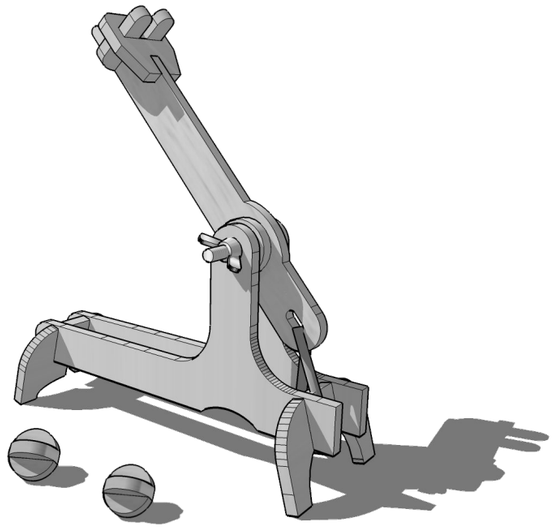

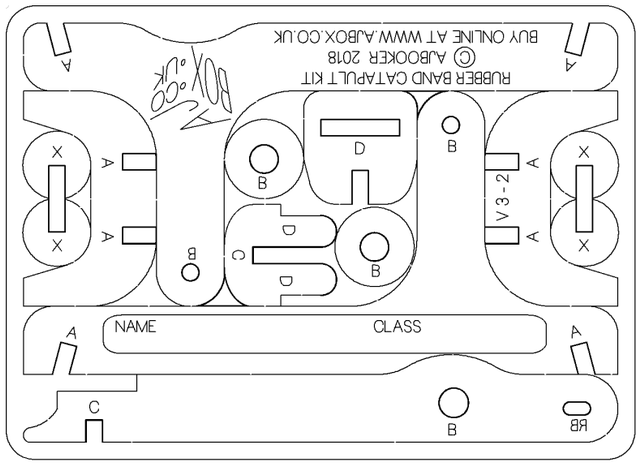

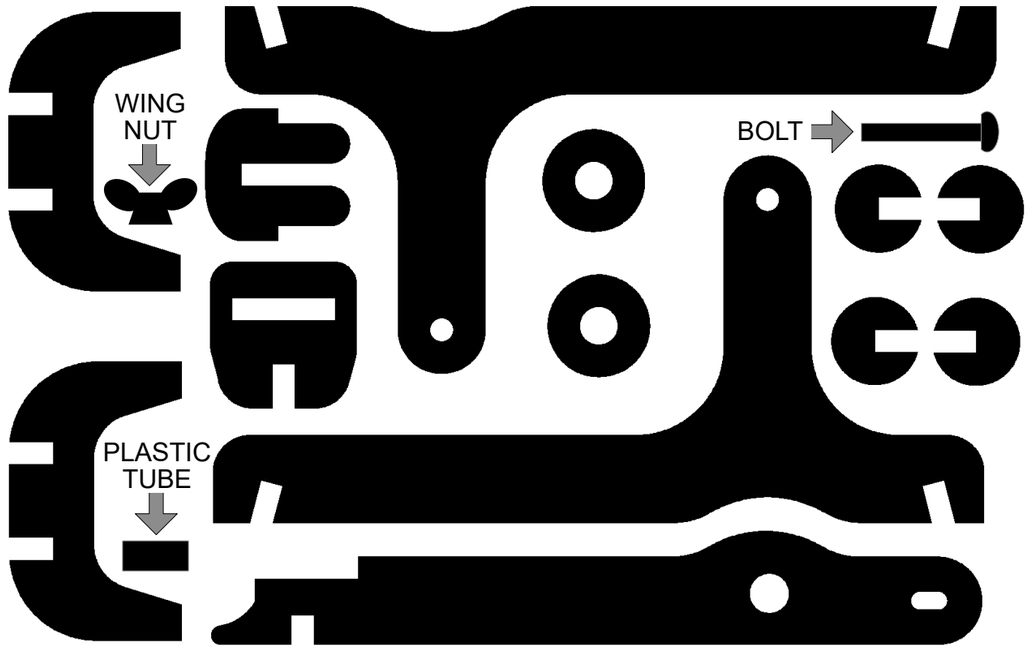

①

Push the feet onto the two **side pieces**.

Press firmly

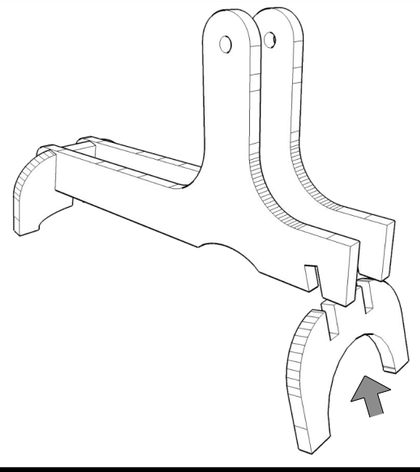

②

Push the two pieces that make up the **load cradle** into position

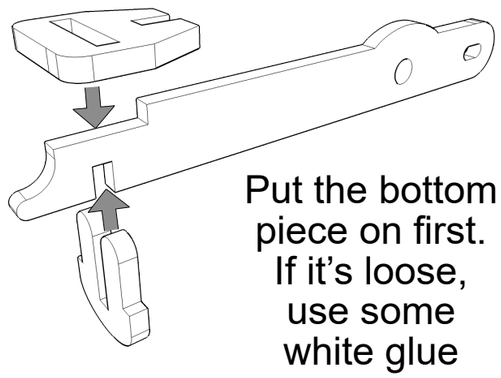

Put the bottom piece on first. If it's loose, use some white glue

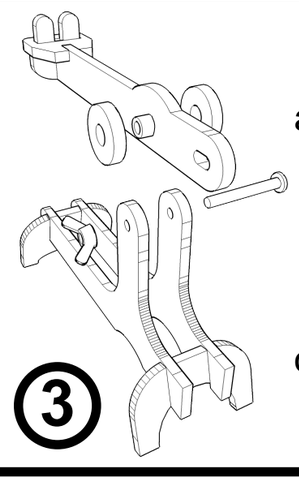

③

Put the little **plastic tube** through the **lever arm**, add the circles either side and then insert it all between the **side pieces**.Put the bolt through from one side of the **side pieces** to the other, then slightly tighten the **wing nut**

④

Assemble the '**load**' and add a rubber band between the **lever arm** and the front foot

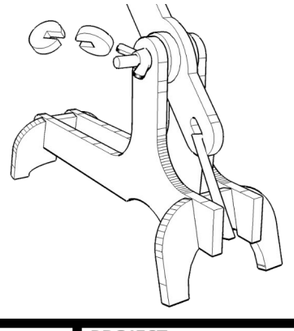

FIRING

Wear safety glasses when firing

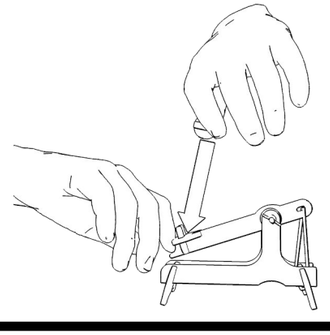

Pull back the **lever arm** with one hand and **load** with the other

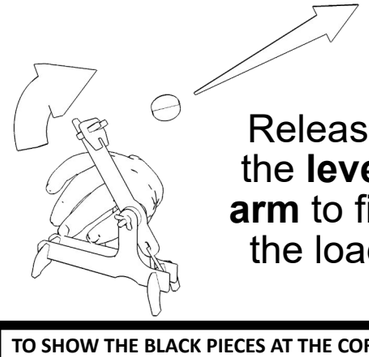

Release the **lever arm** to fire the load

This sheet is © AJ Booker 2018

You may copy and distribute it freely provided you do not change it in anyway

CLASS:

PROJECT:

NAME:

TO SHOW THE BLACK PIECES AT THE CORRECT SCALE, PRINT THIS SHEET ON A3 PAPER